opacmare

Supplier to the best shipyards

MANUAL WINDOWS

manual windows

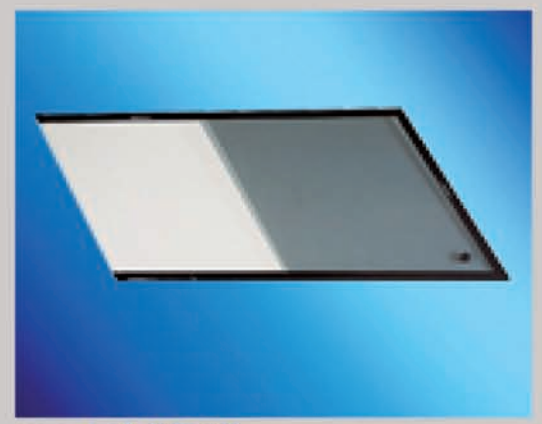

model 2740

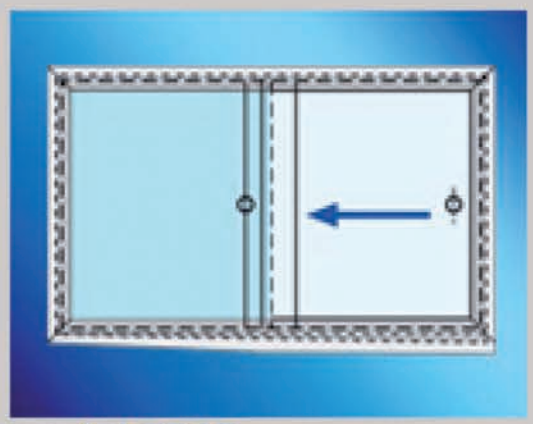

model 2743

model 2746

model 2701

model 2771

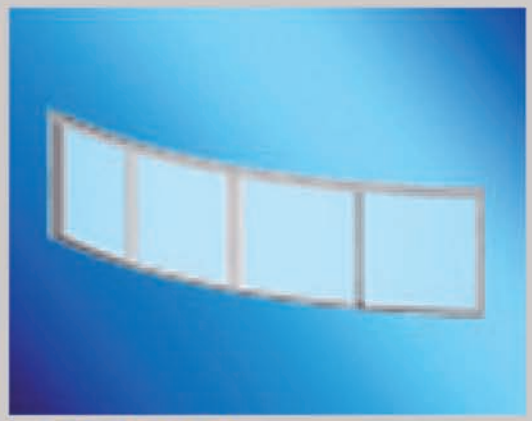

model 2770

MANUAL SLIDING WINDOW 2740

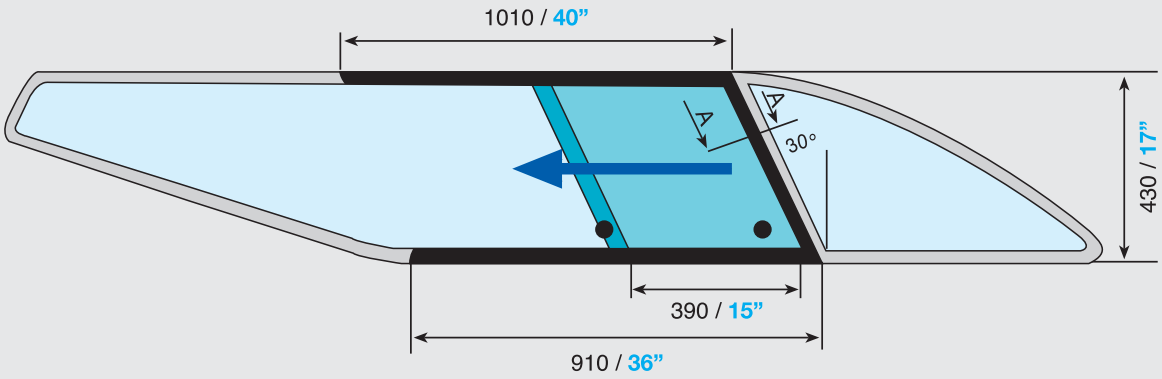

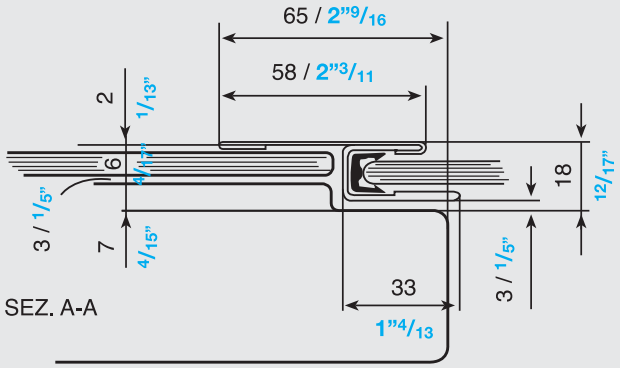

model	glass thickness
2740	8 4/13”

IS NOT A STANDARD PRODUCTION, CAN BE PRODUCEDON DEMAND.

opacmare

MANUAL SLIDING WINDOW 2743

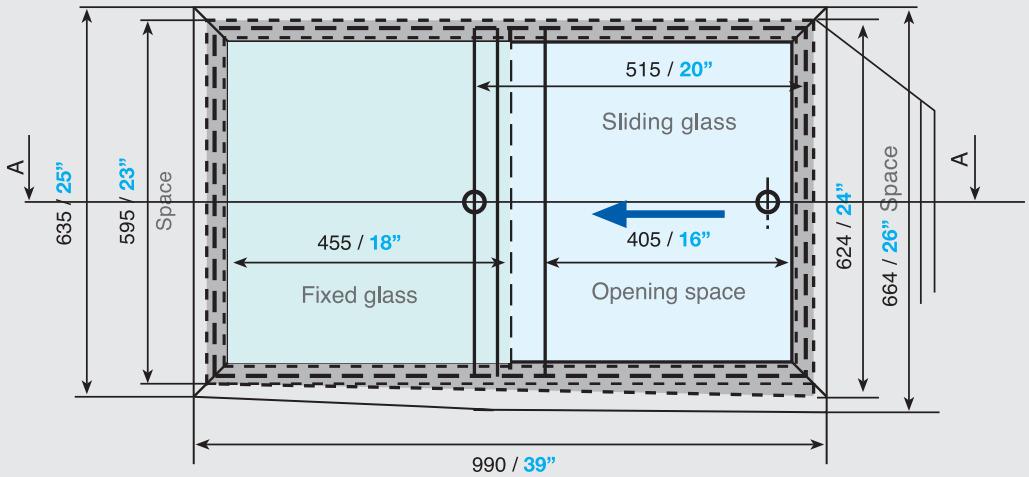

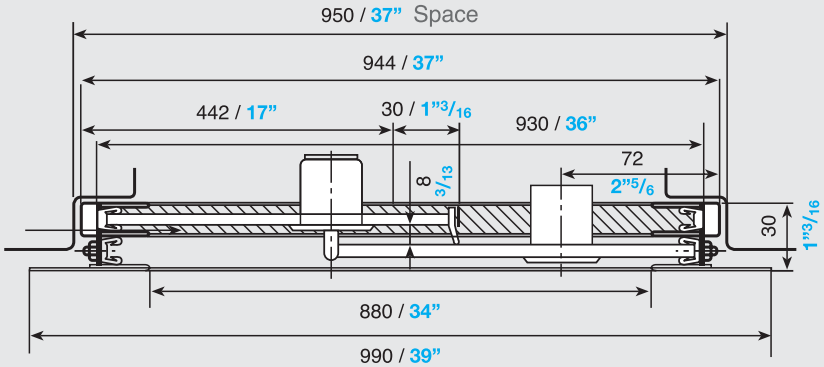

model	glass thickness
2743	6 3/13”

IS NOT A STANDARD PRODUCTION, CAN BE PRODUCEDON DEMAND.

opacmare

MANUAL COMPASSES HINGED WINDOW 2746

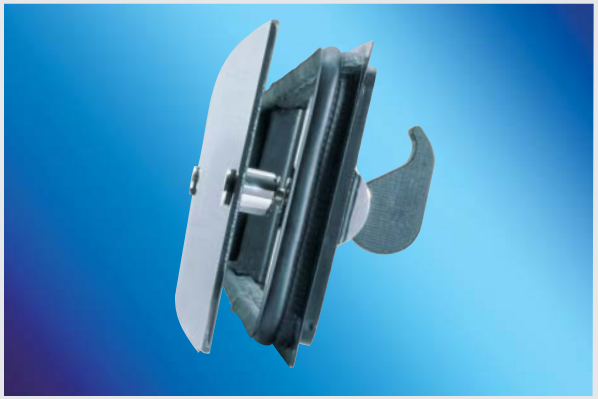

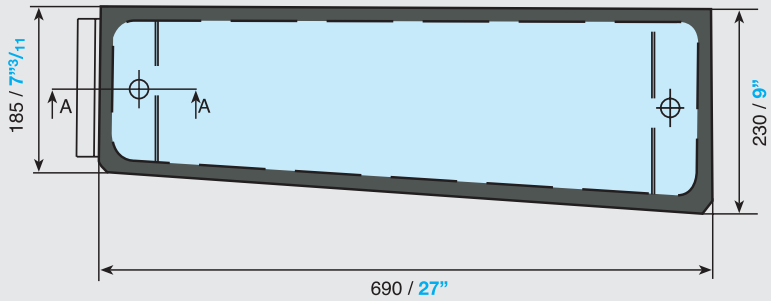

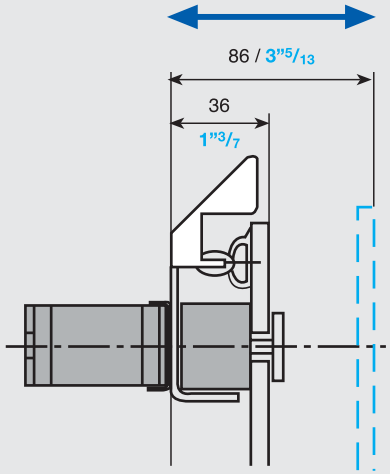

model	glass thickness
2746	6 3/13"

opacmare

MANUAL BOOK-TYPE HINGED WINDOW 2701

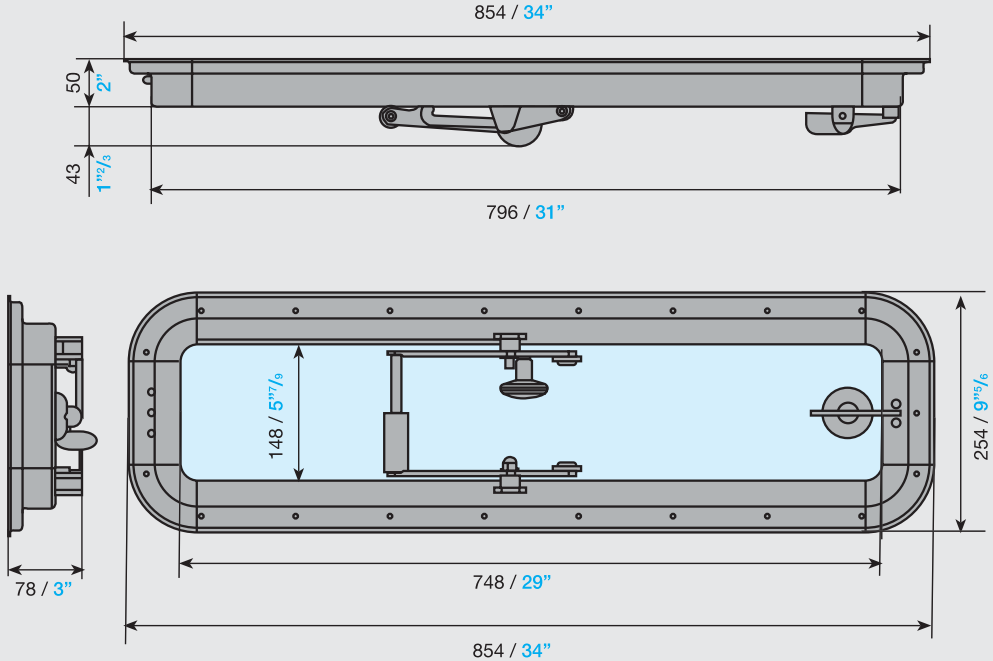

model	glass thickness
2701	6 3/13”

opacmare

MANUAL SLIDING WINDOW 2771

Standard handle
model 7536

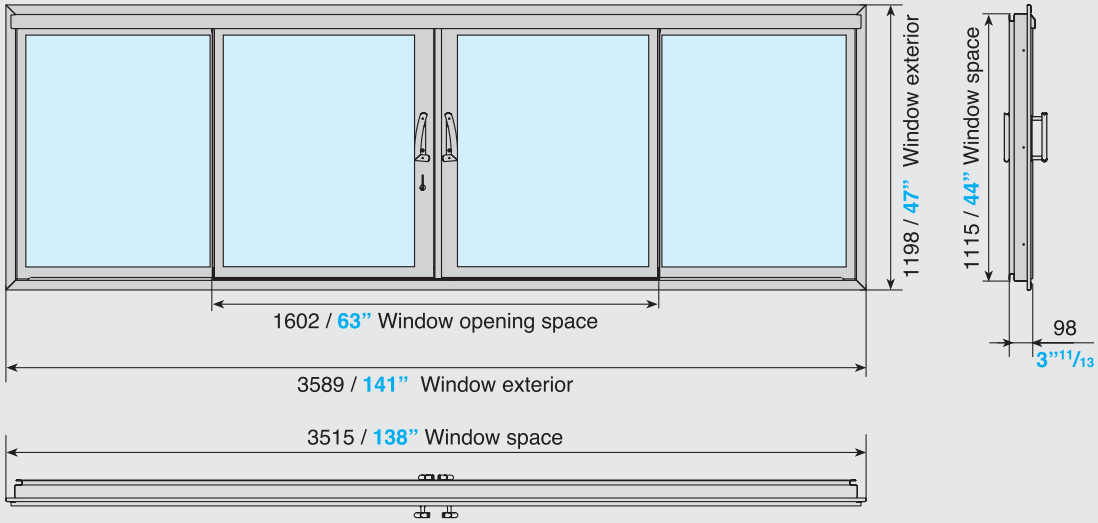

model	glass thickness	handle standard
2771	10 2/5”	7536

opacmare

MANUAL SLIDING WINDOW 2770

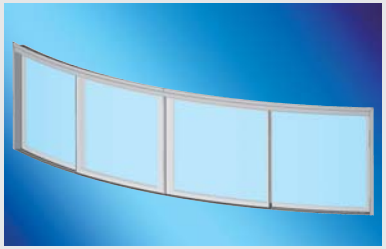

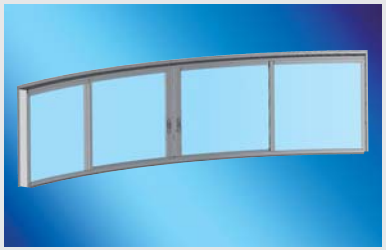

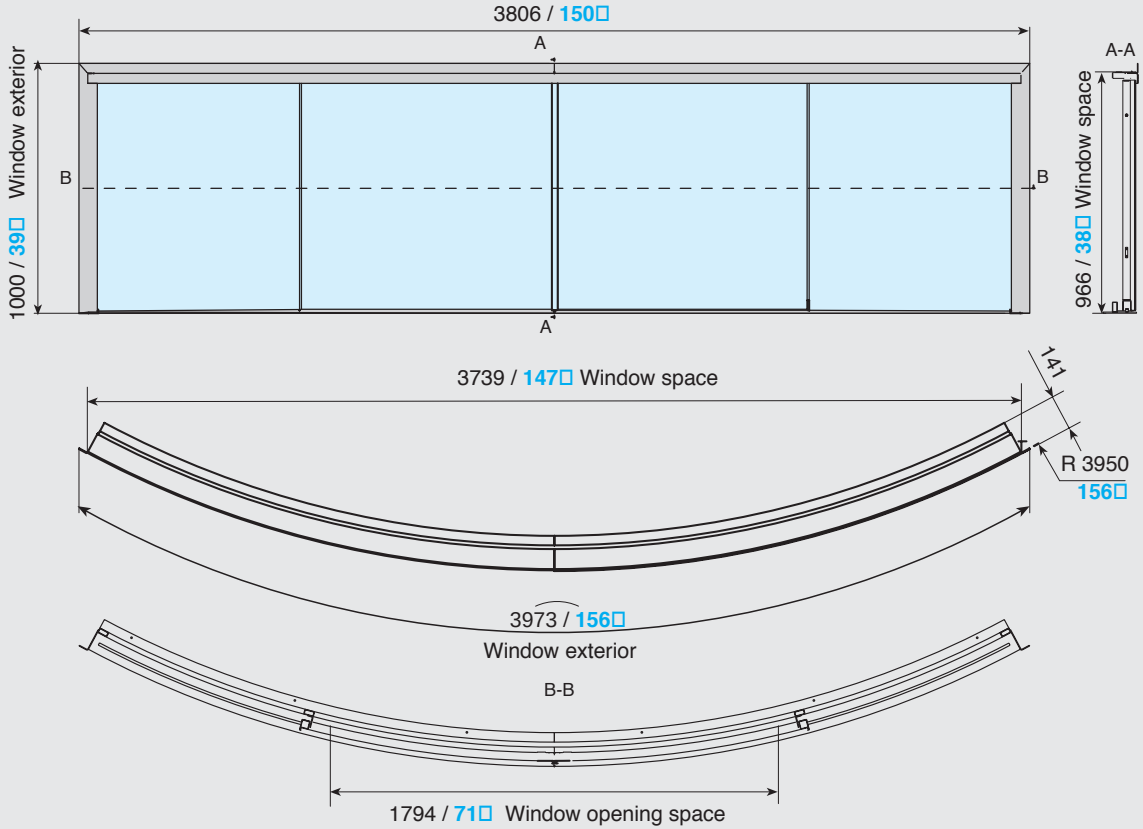

model	glass thickness
2770	8 4/13"

opacmare